Corner Brook Intermediate Math 9

Unit 7: Similarity and Transformations Name: _____

7.3 Similar Polygons – Notes

When one polygon is an enlargement or reduction of another polygon, we say the polygons are Similar. Similar polygons have the Same shape, but not necessarily the same Size.

Here are two similar pentagons.

$\angle P = \angle P' = 90^\circ$
$\angle Q = \angle Q' = 154^\circ$
$\angle R = \angle R' = 96^\circ$
$\angle S = \angle S' = 110^\circ$
$\angle T = \angle T' = 90^\circ$

"$\angle$" means angle.

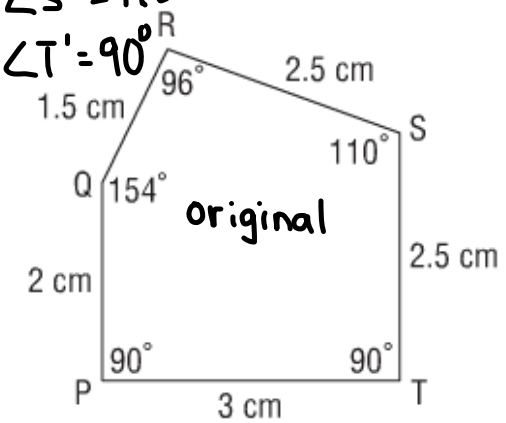

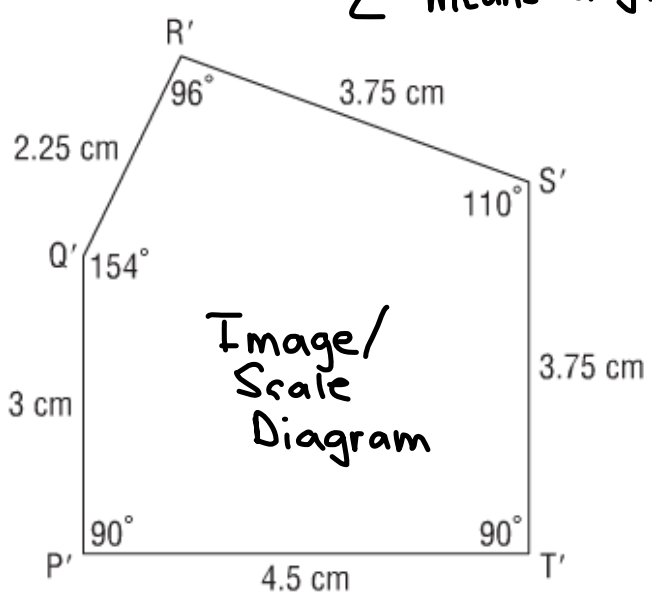

Matching angles are Corresponding angles

Matching sides are Corresponding sides

We list the corresponding angles and the pairs of corresponding sides.

$$\frac{PQ}{P'Q'} = \frac{QR}{Q'R'} = \frac{RS}{R'S'} = \frac{ST}{S'T'} = \frac{TP}{T'P'}$$

$$\frac{2}{3} = \frac{1.5}{2.25} = \frac{2.5}{3.75} = \frac{2.5}{3.75} = \frac{3}{4.5}$$

$$0.\overline{6} = 0.\overline{6} = 0.\overline{6} = 0.\overline{6} = 0.\overline{6}$$

Since, Corresponding angles are equal and corresponding sides are proportional the pentagons are similar.

$PQRST \sim P'Q'R'S'T'$

Properties of Similar Polygons

When two polygons are similar:

1. their corresponding angles are equal *AND*
2. their corresponding sides are proportional

It is also true that if two polygons have these properties, then the polygons are similar.

Quadrilateral ABCD ~ Quadrilateral PQRS

1. $\angle A = \angle P$
$\angle B = \angle Q$
$\angle C = \angle R$
$\angle D = \angle S$

*corresponding angles are equal

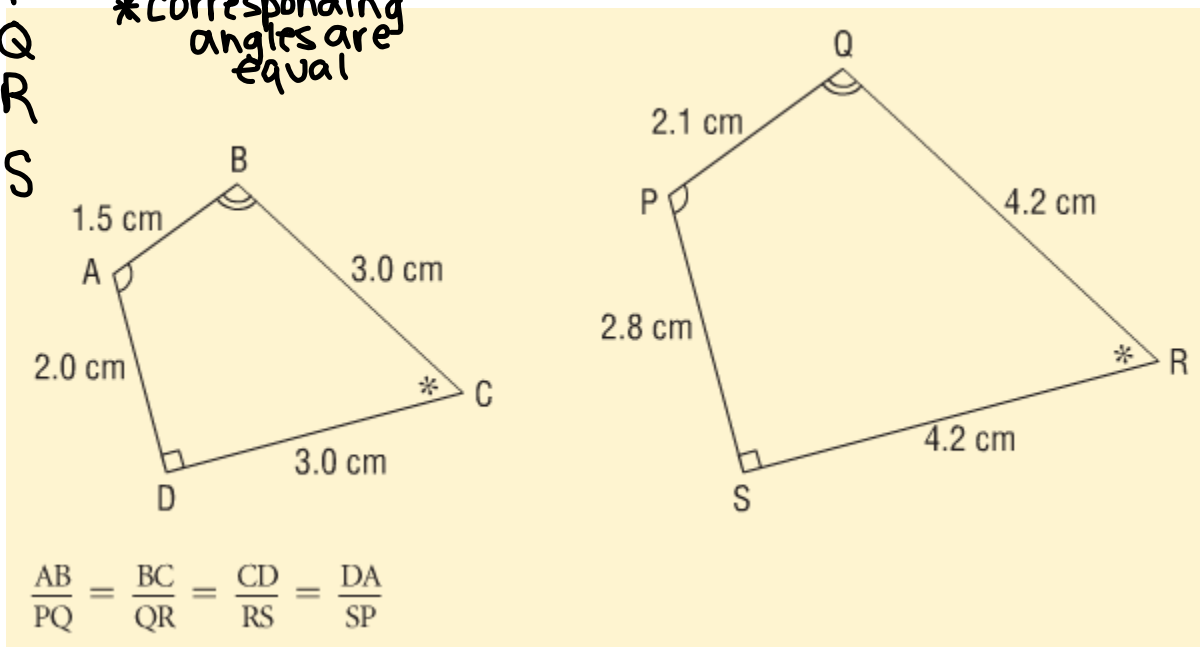

2. $\frac{AB}{PQ} = \frac{BC}{QR} = \frac{CD}{RS} = \frac{DA}{SP}$

$\frac{1.5}{2.1} = \frac{3}{4.2} = \frac{3}{4.2} = \frac{2}{2.8}$

$0.71 = 0.71 = 0.71 = 0.71$

$\therefore ABCD \sim PQRS$

similar

*corresponding sides are proportional

Example (1):

Identify pairs of similar rectangles. Justify the answer.

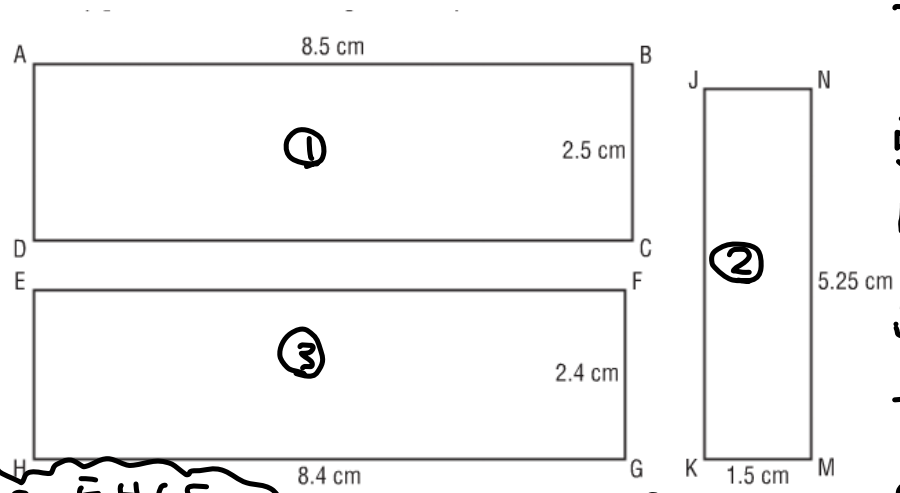

Compare 1 and 2

$\frac{AB}{MN} = \frac{BC}{KM}$

$\frac{8.5}{5.25} = \frac{2.5}{1.5}$

$1.62 \neq 1.\overline{6}$ ... not proportional

Compare 1 and 3

$\frac{AB}{HG} = \frac{BC}{FG}$

$\frac{8.5}{8.4} = \frac{2.5}{2.4}$

$1.01 \neq 1.04$... not proportional

Compare 2 and 3

$\frac{MN}{HG} = \frac{KM}{FG}$

$\frac{5.25}{8.4} = \frac{1.5}{2.4}$

$0.625 = 0.625$... proportional ☺

$JNMK \sim EHGF$

Since,

① $\angle J = \angle E$, $\angle N = \angle H$, $\angle M = \angle G$, $\angle K = \angle F$

and ② $\frac{JN}{EH} = \frac{NM}{HG} = \frac{MK}{GF} = \frac{KJ}{FE}$

Example (2):

a) Draw a larger pentagon that is similar to this pentagon.

b) Draw a smaller pentagon that is similar to this pentagon.

Explain why the pentagons are similar.

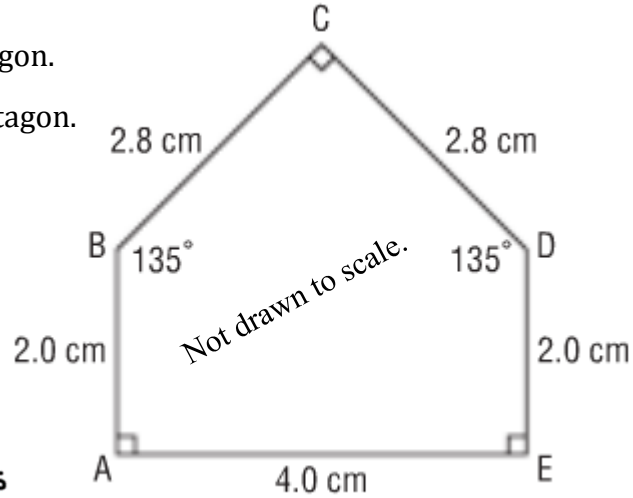

a) S.F = 1.2

2.0cm × 1.2 = 2.4cm

4.0cm × 1.2 = 4.8cm

2.8cm × 1.2 = 3.4cm

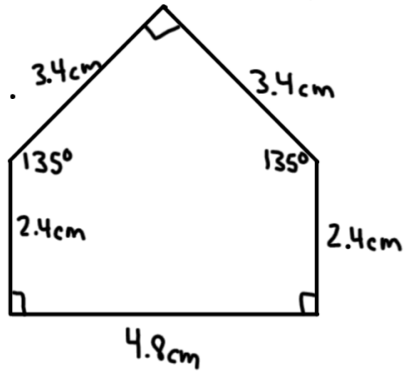

b) use s.f = 0.5

2.0cm × 0.5 = 1cm

4.0cm × 0.5 = 2cm

2.8cm × 0.5 = 1.4cm

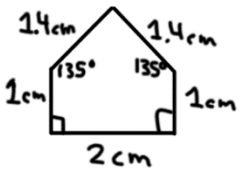

Example (3): These two octagonal garden plots are similar.

a) Calculate the length of GH

b) Calculate the length of NP.

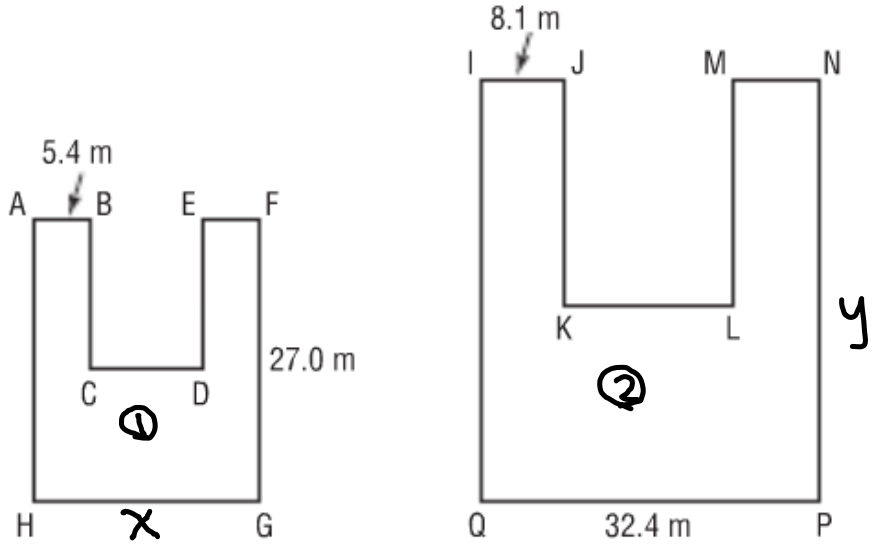

a) $\frac{GH}{QP} = \frac{AB}{IJ}$

Side lengths from octogon 1

Side lengths from octogon 2

$\frac{x}{32.4} = \frac{5.4}{8.1}$ ← choose corresponding sides with known measurements

$\frac{8.1x}{8.1} = \frac{174.96}{8.1}$

$\boxed{x = 21.6}$ ← make sure your answer is reasonable

b) $\frac{NP}{FG} = \frac{IJ}{AB}$

$\frac{y}{27} = \frac{8.1}{5.4}$

$\frac{5.4y}{5.4} = \frac{218.7}{5.4}$

$\boxed{y = 40.5}$